Magnetic-inductive Flowmeter

In-Line

EPM

Installation and operation manual

- High measuring accuracy: 0,5 % of measured value
- Maintenance free
- Measurement without pressure loss
- PTFE- and hard rubber lining
- Wide selection of electrode materials
- Wide selection of process connections

Contents

1. Before installation and commissioning ... 3
1.1 Hazard warning ... 3
1.2 Scope of Application ... 3
1.3 Installation, Setup, Commissioning and Maintenance ... 3
1.4 Intended usage ... 4
1.5 Packaging / Storage / Transport ... 4
1.6 Warranty ... 5
1.7 Return for Repair and Service ... 5
2. Identification ... 5
2.1 Manufacturer ... 5
2.2 Identification / Nameplate ... 6
3. Operating Principle and System Design ... 7
3.1 Mode of operation ... 7
3.2 System configuration ... 7
3.2.1 Integrally mounted transmitter ... 7
3.2.2 Remote mounted transmitter ... 8
3.3 Performance data ... 8
3.4 Dimensions and weight ... 11
4. Installation / Operating conditions ... 12
4.1 Receipt of goods ... 12
4.2 Transport ... 12
4.3 Installation requirements ... 12
4.4 Einbau ... **Fehler! Textmarke nicht definiert.**
4.4.1 Installation in pipelines with larger nominal sizes ... 13
4.4.2 Horizontal and vertical installation ... 13
4.4.3 Installation example ... 13
4.4.4 Grounding – Potential equalisation ... 15
4.4.5 Bolt tightening torques ... 16
4.4.6 Remote mounting of the transmitter ... 17
4.5 Wiring ... 18
4.5.1 Integrally mounted transmitter ... 18
4.5.2 Remote mounted transmitter ... 19

1. Before installation and commissioning

Before installing and commissioning the device, the operating instructions must be read in their entirety and fully understood. If any part of the operating instructions is not available to you, please contact Heinrichs Messtechnik. The operating instructions are also available for downloading from our website.

All devices are carefully inspected prior to shipment to ensure compliance with the order specifications and proper functionality. Nevertheless, if you have any questions regarding your purchased product, please contact Heinrichs Messtechnik.

Please read these instructions carefully before installing and commissioning the device. Special versions and specific applications are not covered by these instructions.

Upon receipt of the device, please carry out a visual inspection to identify any damage that may have occurred during transport. If you detect any defects or damage, please contact Heinrichs Messtechnik or your responsible sales representative. In addition to a description of the fault or damage, we require the device type and the serial number of the measuring instrument.

Heinrichs Messtechnik GmbH accepts no liability or warranty claims for repairs or attempted repairs carried out without our prior written approval.

1.1 Hazard warning

The following information is intended both to ensure your personal safety and to protect the described product and any connected equipment from damage.

Safety instructions and warnings intended to prevent hazards to the life and health of users or maintenance personnel, as well as to prevent property damage, are highlighted throughout this documentation by the signal words defined below. Within the scope of this documentation and the instructions provided on the products themselves, the terms used have the following meanings:

Warning

means that death, serious personal injury, or significant property damage may occur if the appropriate precautionary measures are not taken!

Attention

means that minor personal injury, or property damage may occur if the appropriate precautionary measures are not taken!

Note

means important information concerning the product, its handling or the respective parts of the documentation that require special attention.

1.2 Scope of Application

The magnetic-inductive flowmeter EPM measures and monitors the volume flow rate of liquids with and without solid concentrations, slurries, pastes and other electrically conductive media with minimal pressure loss. The electrical conductivity of the medium must be at least 20 µm/cm.

Pressure, temperature, density and viscosity have no influence on the volume flow measurement.

Small amounts of solids and gas bubbles will be measured as part of the volume flow. Higher concentrations of solids and gas bubbles can cause malfunctions.

1.3 Installation, Setup, Commissioning and Maintenance

The installation, setup, commissioning and maintenance of safety-relevant components may only be carried out by personnel trained and authorized by the plant operator or by service technicians from Heinrichs Messtechnik.

The qualified personnel must have read and understood the operating instructions and must follow the instructions contained therein.

The applicable laws, regulations and requirements in the country of operation must be observed.

Warning

Observe the technical data on the nameplate and the safety instructions in the separate operating instructions of the associated converter!

Heinrichs Messtechnik assumes no liability for damages caused by improper intervention, the usage of replacement parts, external electrical and mechanical influences, overvoltage or lighting strikes. In such cases the warranty shall be void. Likewise, no liability is assumed for any consequential arising damages.

In the event of a malfunction, the service department of Heinrichs Messtechnik will be pleased to help:

Fon: +49 221 49708-0
Fax: +49 221 49708-178
Website: www.heinrichseu
E-Mail: info@heinrichs.eu

For the coordination and technical support of necessary diagnostic and repair procedures our customer service is pleased to assist.

1.4 Intended usage

Warning

The operator is responsible for ensuring that the materials of the sensor as well as of the transmitter house are properly selected and suitable for the measured medium and the ambient conditions meeting the relevant requirements.

The manufacturer assumes no liability in this regard!

Attention

The proper and safe operation of the product requires appropriate transport, proper storage, installation and assembly as well as careful operation and maintenance.

The electromagnetic flowmeter may only be used to measure liquids, suspensions and pastes with an electrical conductivity of ≥ 20 µS/cm.

The responsibility for suitability and intended use lies solely with the operator. In case of damage resulting from improper or unintended use, the manufacturer assumes no liability. Such use will result in the loss of warranty.

Before using corrosive or abrasive process media, the operator must verify the resistance of all materials in contact with the process medium. In the case of special process media, including cleaning media, we will be pleased to assist in verifying the corrosion resistance of the materials in contact with the process medium. However, the responsibility remains with the operator. Even minor changes in temperature, concentration, or the degree of contamination in the process may affect the corrosion resistance of the materials. Therefore, as the manufacturer, we assume no warranty or liability regarding the corrosion resistance of materials in contact with the process medium in a specific application.

1.5 Packaging / Storage / Transport

When unpacking, please proceed with care to avoid damage.

The storage prior to the installation shall take place in clean and dry location to prevent contamination, particularly of the interior of the valve. The specific ambient temperature limits must be observed.

Upon receipt, the delivery note enclosed with the shipment must be used to verify that all technically relevant data corresponds to the order.

For transport to a remote installation site, we recommend reusing the original packaging, including the transport securing devices.

If any defects are identified upon delivery, please contact the manufacturer. In addition to a description of the defect, we require the device type and the serial number of the delivered unit. As the manufacturer, we cannot accept any liability for repair attempts carried out by third parties. In the event of a complaint, the parts in question must be made available to us for inspection, unless otherwise agreed.

Any transport damage must be reported immediately upon delivery. Damage reported later cannot be accepted.

1.6 Warranty

The flowmeter has been manufactured in accordance with high-quality standards and has been thoroughly tested. Should any claims arise during proper usage despite our tests, we will be pleased to provide prompt service. The scope and duration of warranty are specified in the contractual terms and conditions of delivery. Any warranty claim is subject to proper installation and commissioning in accordance with the operation instruction valid for the device. The required installation, commissioning and maintenance work may only be performed by qualified and authorized personnel.

1.7 Return for Repair and Service

NOTE

Note
According to the applicable waste management law the owner/customer is responsible for the disposal of hazardous waste and hazardous substances. Therefore, all devices returned to Heinrichs Messtechnik for repair and service must be cleaned and completely free of any hazardous substances. This also applies for any cavities, internal voids and gaps within the devices.

Please contact our service department to arrange the return of your device for repair. Before returning the device for repair and maintenance, the following steps must be completed:

- Always include a complete Declaration of Decontamination with the returned device. A corresponding form is available on our website: **www.heinrichs.eu/service**
- Essure all medium residues have been removed and clean the device thoroughly.
- Include a description of the problem with the device and provide as much information as possible. Please provide a contact person for all further correspondence.

Please provide information on any special handling requirements necessary for you or your processes.

Should hazardous substances still be present at the return of the device, Heinrichs Messtechnik shall be entitled to invoice the cost for disposal to the client without further consultation.

2. Identification

2.1 Manufacturer

Manufacturer: **Heinrichs Messtechnik GmbH**
Robert-Perthel-Strasse 9
50739 Cologne
Germany

Fon: +49 221 49708-0
Fax: +49 221 49708-178

Website: www.heinrichs.eu
E-Mail: info@heinrichs.eu

Product type: Magnetic-inductive flowmeter based on Faraday´s law of induction.
Product name: EPM

File name: EPM_BA_26.01_EN
Version: 26.01
Datum, August 31, 2026

2.2 Identification / Nameplate

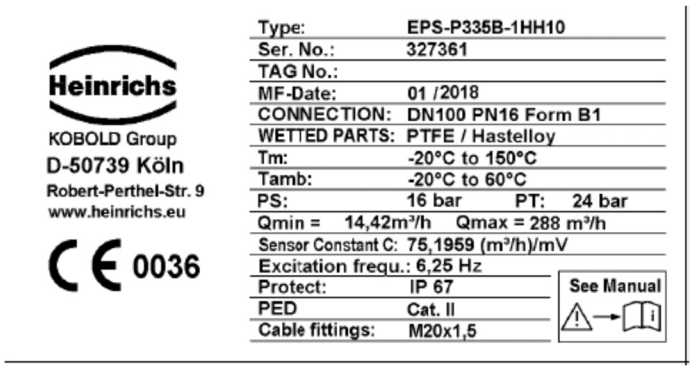

The name plate contains the following information:

Logo	Manufacturer´s logo
Address	Manufacturer´s address (internet address)
CE	CE-marking in accordance with the applied EC Directives
Type	Type designation
Code	Modelcode
Ser. No.	Serial number (for tracking reasons)
Tag No.	Operator´s measuring point number (if stated in the purchase order)
T amb	Ambient temperature range
T m	Medium temperature range
C	Sensor constant
DN	Flange designation
PN	Pressure rating of flange
PS	Max. permissible process pressure
PED	**Information about the Pressure Equipment Directive 2014/68/EU.** - For devices with a process connection ≤ DN 25: ○ No CE marking of the pressure equipment is applied in accordance with Article 4(3) of the Pressure Equipment Directive (PED). The exemption pursuant to Article 4(3) of the PED is stated under PED (**P**ressure **E**quipment **D**irective). The device is classified as SEP (**S**ound **E**ngineering **P**ractice). - For devices with a process connection > DN 25: ○ CE marking includes the identification number of the **Notified Body** that has certified the manufacturer's production. ○ Specification of the applicable **category (I, II, III or IV)** in accordance with the Pressure Equipment Directive. Fluid Group 1 corresponds to **"hazardous fluids".**
Materials	Material of wetted parts such as pipe lining, material of electrodes and sealings.
MF-Date	Manufacturing year
Degrees of protection	Degrees of protection in accordance with DIN EN 60529:2014

3. Operating Principle and System Design

3.1 Mode of operation

According to Faraday´s law of induction, an electrical field is generated in a conductive fluid flowing with a flow velocity **V** through a magnetic field **B**. In a measuring pipe with an isolated lining, through which a liquid flows at flow velocity **V**, a measuring voltage **Um** is induced at the two electrodes. This voltage is perpendicular to the direction of the flow as well as the magnetic field **B** generated by the excitation coils.

The magnitude of this measuring voltage is proportional to the mean flow velocity and to the volumetric flow rate.

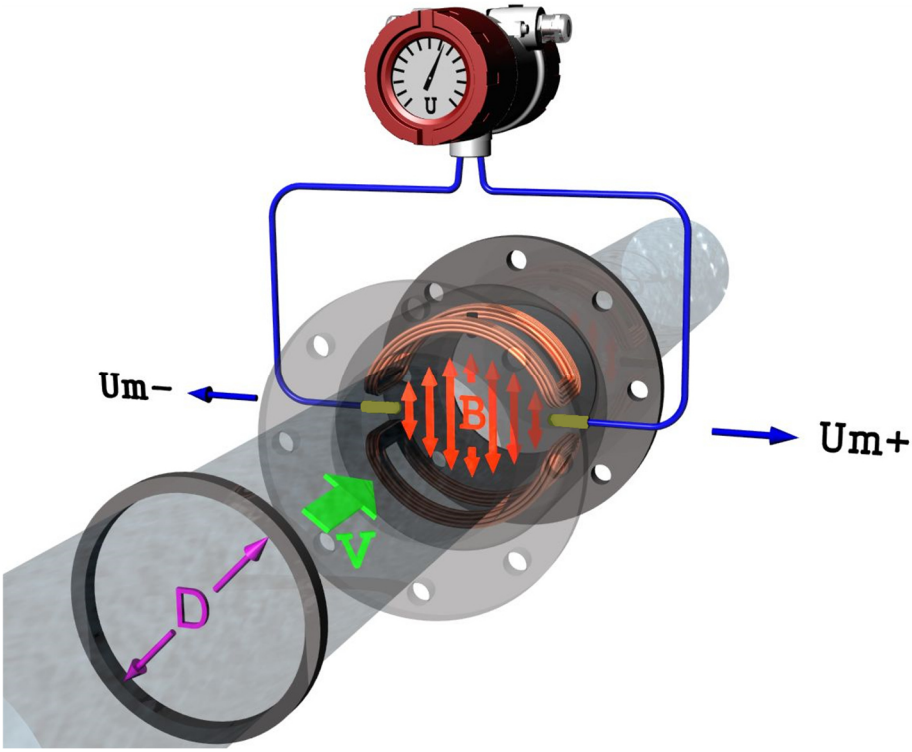

3.2 System configuration

The electromagnetic flowmeter, type EPM, consists of a sensor, which detects an induced measurement signal generated by the process medium flowing through the pipeline, and a transmitter, which converts this signal into standardized output signals (4–20 mA or pulses).

The sensor is installed in the pipeline, while the transmitter, depending on the device version, can either be mounted directly on the sensor or installed separately.

3.2.1 Integrally mounted transmitter

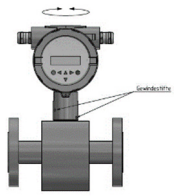

This design significantly reduces the installation effort. The orientation of the transmitter can be adjusted to suit the installation conditions.

To change the orientation, loosen the locking screws and carefully rotate the transmitter to the desired position. Then retighten the locking screws.

Warning

The transmitter may be rotated to a maximum of 270°. Rotating the transmitter beyond this range may damage the internal wiring.

Do not force the transmitter beyond the permitted rotation range.

3.2.2 Remote mounted transmitter

This version is recommended for applications where space is limited or where high process medium temperatures are present. The connection between the sensor and the transmitter is established via a cable with separately shielded circuits for the field coils and electrodes.

In the remote version the sensor and transmitter are equipped with a separate terminal box for electrical connection.

In the standard version, the terminal boxes have an ingress protection rating of IP67.

The sensor is optionally available with an IP68 ingress protection rating. With this version, the connecting cable is connected to the sensor at the factory. The cable connection on the sensor side is then permanently encapsulated to ensure the required degree of protection.

The transmitter is equipped with a mounting bracket for wall mounting. The mounting bracket enables the transmitter to be securely installed on a suitable, level mounting surface.

3.3 Performance data

Measuring accuracy:

1 m/s ... 10 m/s : ± 0,5 % of measured value

< 1 m/s : ± (0,4 % + 1mm/s) of measured value

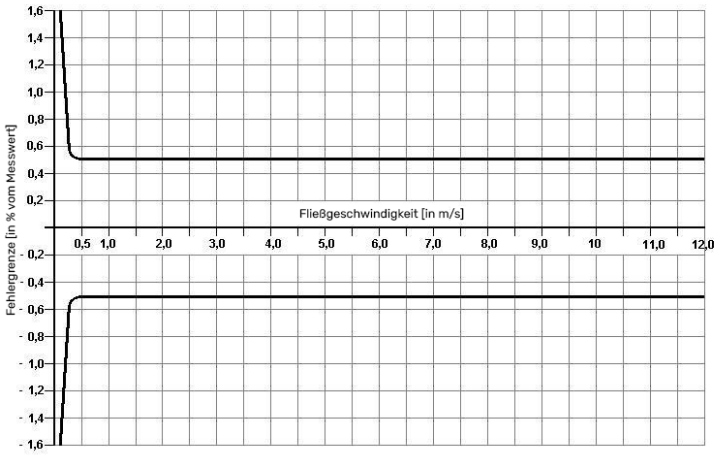

Repeatability:

+/- 0,15 % of actual value + 0,00005 * (Q at 10 m/s))

Flow velocity limits:

0,25 ... 10 m/s

Reference conditions:

- Process medium temperature 22 °C ± 4 K
- Ambient temperature 22 °C ± 2 K
- Inlet straight length ≥ 10 x DN and outlet straight length ≥ 5 x DN
- Sensor and transmitter are grounded

Conductivity of process medium:

≥ 20 µS/cm

Influence of ambient temperature:

See the operating instructions of the corresponding transmitter.

Influence of process medium temperature:

None

Materials:

Measuring tube:	Stainless steel
Flange:	Steel (1.0460 / 1.0570), optional stainless steel (1.4404 / 1.4571)
Measuring tube lining:	Hard rubber (VHE/102), PTFE
Electrodes:	Stainless steel, Hastelloy C276, Titanium, Tantalum, Platinum.

Ambient temperature:

-20 °C ... 60 °C (-4 °F... 140 °F)

Below 0 °C the readability of the LCD display is limited

Storage temperature:

The storage temperature range is identical to the ambient temperature limits.

Process temperature:

The maximum permissible process temperature depends on the lining material.

Hard rubber	PTFE
90 °C (194 °F)	130 °C (266 °F) at 25 bar
optional: 100 °C (212 °F)	100 °C (212 °F) at 40 bar

The minimum permissible process temperature depends on the flange material.

1.0460 / 1.0570	1.4404 / 1.4571
-10 °C (14 °F)	-20 °C (-4 °F)

Ingress Protection Rating:

Integrally mounted transmitter:	IP 67
Remote mounted transmitter:	IP67, optional IP68 (sensor-side terminal box permanently encapsulated)
Corrosion protection class:	C2

Pressure:

The maximum permissible pressure is reduced for pressure ratings PN 10 and PN 16 for sizes larger than DN 300 at process medium temperatures of:

Process medium temperature	PN10	PN16
< 100 °C (< 212 °F)	10,0 Bar	16,0 Bar
100 °C (212 °F)	9,3 Bar	14,9 Bar
130 °C (166 °F)	9,0 Bar	14,3 Bar

Nominal sizes and measuring ranges:

Nominal sizes: DN15... 800
ANSI ½"... 32"

The volumetric flow rate depends on the flow velocity and the nominal size of the flowmeter. The flow nomogram shows the flow range that can be measured by a flowmeter of a given nominal size, and which nominal size is suitable for a specific flow rate.

The magnetic-inductive flowmeter is designed to operate within the range of flow velocities typically encountered in practice. These range from 0,25 to 10 m/s at the upper limit of the measurement range. The flow nomogram shows the volumetric flow rate in m³/h and the flow velocity in m/s as a function of the nominal size DN of the sensor.

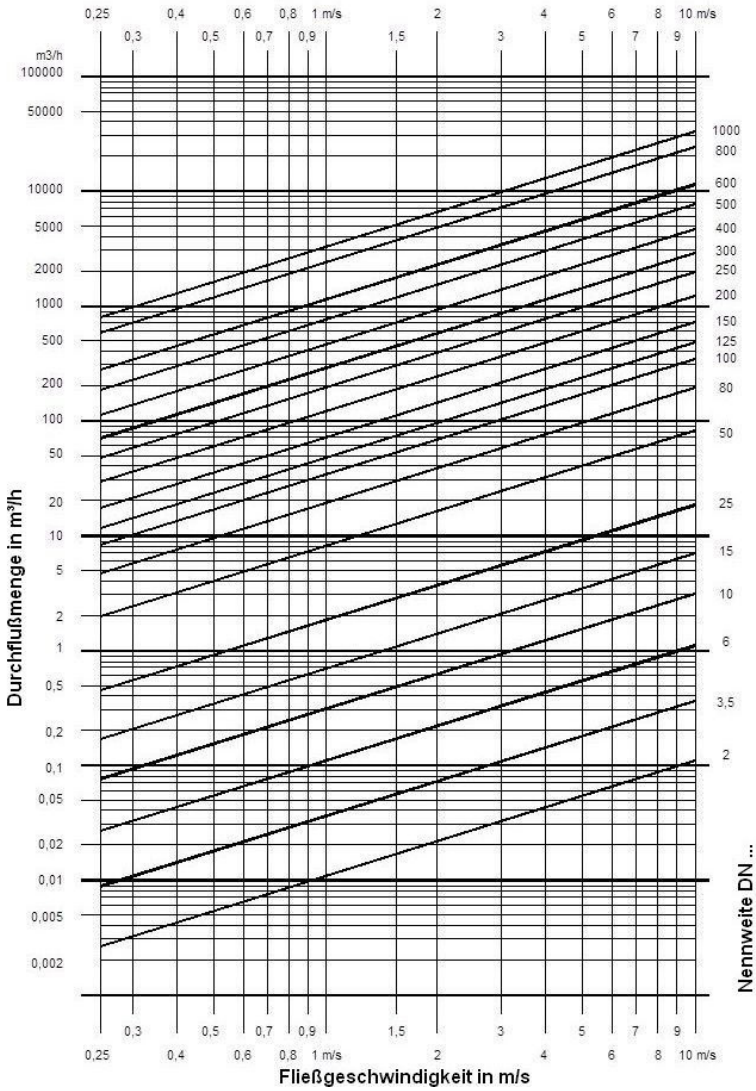

Measuring range table:

ANSI	DIN	$Q_{max.}$ [m³/h] Factory setting	$Q_{max.}$ [m³/h] optional
½"	DN 15	3	6,36
1"	DN 25	10	17,67
1¼"	DN 32	10	28,95
1½"	DN 40	10	45,24
2"	DN 50	20	70,69
2½"	DN 65	50	119,5
3"	DN 80	50	181,0
4"	DN 100	70	282,7
5"	DN 125	100	447,8
6"	DN 150	150	636,2
8"	DN 200	250	1 131
10"	DN 250	400	1 767
12"	DN 300	500	2 545
14"	DN 350	700	3 464
16"	DN 400	1 200	4 524
18"	DN 450	1 200	5 726
20"	DN 500	1 200	7 069
24"	DN 600	1 200	8 553
28"	DN 700	3 600	10 179
32"	DN 800	3 600	18 096

3.4 Dimensions and weight

Intergrally mounted transmitter

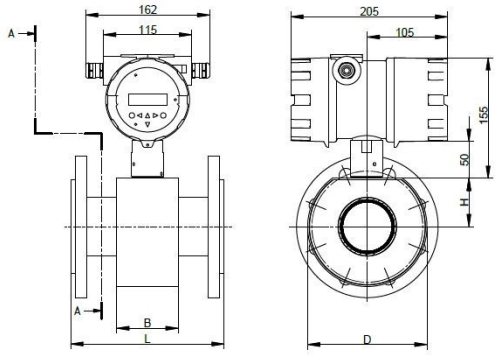

Remote mounted transmitter

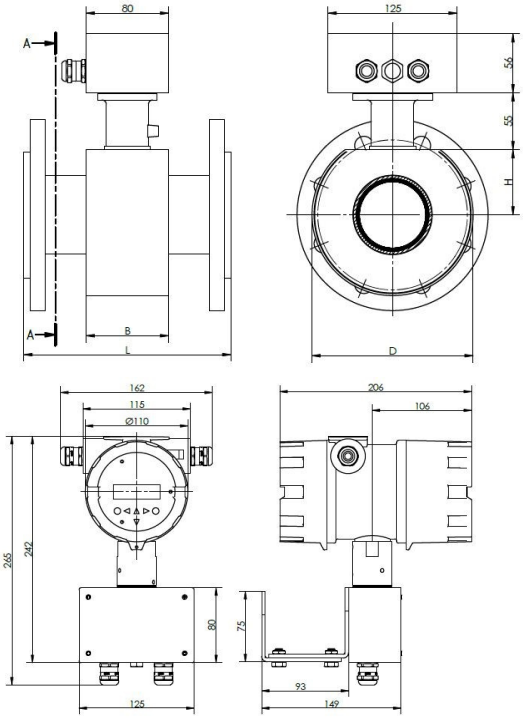

DIN/EN	ANSI	Installation length L [mm]			Tolerance [mm]	B [mm]	D [mm]	H [mm]	weight [kg] EN flange Integrally mounted
		Hard rubber	PTFE without protective shield	PTFE with protective shield					
DN 15 PN 40	½" 150 RF	200	200	206	0 / -3	80	130	53	5,00
DN 25 PN 40	1" 150 RF	200	200	206	0 / -3	80	130	53	6,00
DN 32 PN 40	1¼" 150 RF	200	200	206	0 / -3	80	130	53	7,00
DN 40 PN 40	1½" 150 RF	200	200	206	0 / -3	80	130	53	7,50
DN 50 PN 40	2" 150 RF	200	200	206	0 / -3	80	140	57	9,00
DN 65 PN 16	2½" 150 RF	200	200	206	0 / -3	80	155	63	10,0
DN 80 PN 16	3" 150 RF	200	200	206	0 / -3	80	170	70	13,0
DN 100 PN 16	4" 150 RF	250	250	256	0 / -3	120	210	86	15,0
DN 125 PN 16	5" 150 RF	250	250	256	0 / -3	120	240	98	19,0
DN 150 PN 16	6" 150 RF	300	300	306	0 / -3	120	285	117	23,0
DN 200 PN 10	8" 150 RF	350	350	356	0 / -3	200	350	143	36,0
DN 250 PN 10	10" 150 RF	450	450	360	0 / -4	200	440	180	52,0
DN 300 PN 10	12" 150 RF	500	500	460	0 / -4	200	520	213	62,0
DN 350 PN 10	14" 150 RF	550	550	510	0 / -5	225	474	237	95,0
DN 400 PN 10	16" 150 RF	600	600	560	0 / -5	250	524	262	115
DN 450 PN 10	18" 150 RF	600	600	610	0 / -5	270	584	292	135
DN 500 PN 10	20" 150 RF	600	600	610	0 / -5	300	629	315	150
DN 600 PN 10	24" 150 RF	600	600	610	0 / -5	360	734	367	182
DN 700 PN 10	28" 150 RF	700	700		0 / -5				
DN 800 PN 10	32" 150 RF	800	800		0 / -5				

For the remote mounted version, the weight increases due to the additional electronic.

Weight of the transmitter: 3,9 kg

4. Installation / Operating conditions

4.1 Receipt of goods

- Check the packaging and contents for damage.
- Inspect the supplied goods to ensure complete delivery and compare the consignment with your order specifications.

4.2 Transport

Please observe the following tips when unpacking your device, or transporting it to its measuring point:

- If possible, the devices should be forwarded in the packaging in which they were delivered.
- Do not remove the protective discs or protective caps fitted to the process connections. This applies to sensors with PTFE measuring tube lining. The protective caps should only be removed immediately before installing the sensor in the pipeline.
- The devices must not be lifted for transport by the mounted transmitter housing or terminal housing. For heavy devices, use lifting straps for transport and place them around both process connections. Chains should be avoided, as they may damage the paintwork or housing.
- For devices without lifting lugs, where the lifting straps are attached around the measuring tube, the center of gravity of the complete device may be higher than the two lifting points of the straps. Therefore, ensure during transport that the device cannot rotate or slip unintentionally. Otherwise, there is a risk of injury.
- Sensors with a nominal size of DN 150 and above must not be lifted using a forklift truck with the forks positioned against the outer casing. This may dent the casing and damage the internal magnetic coils. There is also a risk that the device may roll off the forklift forks.
- If the sensor is fitted with a PTFE (Teflon) lining, it is supplied with two wooden discs fitted to the sensor to keep the lining in position during transport and storage. These wooden discs should remain fitted to the sensor until installation. Without the discs, the lining may creep back towards its original shape, making installation more difficult. The sensor should not be left without the discs for more than a few hours. Remove the discs immediately before installation.

4.3 Installation requirements

The installation location in the pipeline must be selected so that the sensor is always filled with the process medium and cannot run empty. This can be ensured by installing the sensor in vertical upward-flow sections or in siphons.

The measuring principle is largely independent of the flow profile of the process medium, provided that stationary vortices do not extend into the measurement area, for example downstream of pipe bends or partially open gate valves upstream of the sensor. In such cases, measures to normalize the flow profile are required. Experience has shown that, in most cases, a **straight inlet section of ≥ 5 × DN** and a **straight outlet section of ≥ 2 × DN** of the sensor's nominal size are sufficient. Strong electromagnetic fields must not be present near the sensor installation location.

For bidirectional flow measurement, both sides of the sensor must be provided with a straight pipe section having the same nominal size as the sensor and a length of 5 × DN. It is recommended to install control devices, such as shut off and control valves, downstream of the sensor. The flow direction is indicated by an arrow on the sensor. When installing the sensors, observe the specified screw tightening torques. After installation of the sensor and completion of the wiring, the electrical commissioning can be carried out. To prevent measurement errors caused by gas entrained in the process medium and damage to the sensor's measuring tube lining due to negative pressure, the following points must be observed:

- **Bypass line**
  A bypass line arrangement can be provided to allow the sensor to be easily removed, drained and cleaned. The bypass line with blind flange allows the process medium piping to be cleaned without removing the flowmeter and is therefore recommended for process media with a high degree of contamination.
- **Measuring tube lining**
  For a device with a PTFE measuring tube lining, particular care must be taken when installing the device in the pipeline. The measuring tube lining is flared over at the flanges (sealing lip). The flared section must not be damaged or removed, as this could allow process medium to penetrate between the flange and the measuring tube and damage the electrode insulation. Protective rings can optionally be bolted onto the sensor.

4.4 Installation

Bolts, nuts and gaskets are not included in the scope of delivery and must be provided by the customer. The sensor is installed between the pipelines. It is essential to observe the required bolt tightening torques specified in Section 5.4.5 on page 16. For DIN flanges, use only gaskets in accordance with DIN EN 1514-1. Installed gaskets must not protrude into the pipeline cross-section.

Warning

Do not use electrically conductive sealing compounds, such as graphite. An electrically conductive layer may form on the inside of the measuring tube, which could short-circuit the measurement signal.

4.4.1 Installation in pipelines with larger nominal sizes

The flow sensor can be installed in pipelines with larger nominal sizes using reducers (e.g. flanged transition pieces in accordance with DIN EN 545). However, the pressure loss caused by the reduction must be considered.

To prevent flow separation in the measuring tube, a reduction angle of ≤ 8° should be maintained for the reducers.

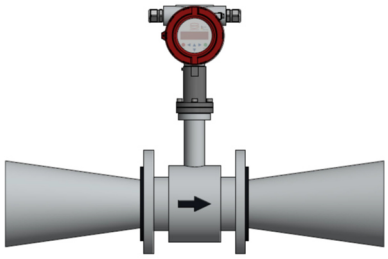

4.4.2 Horizontal and vertical installation

The sensor can be installed in any direction. **For horizontal installation the imaginary electrode axis x-y should be approximately horizontal.** A vertical orientation of the electrode axis should be avoided, as gas bubbles entrained in the process medium or solids in the process medium may otherwise affect the measurement accuracy.

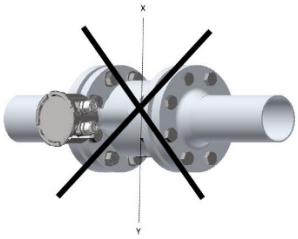

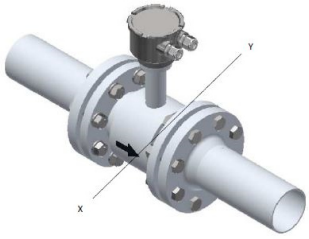

4.4.3 Installation example

To prevent measurement errors caused by gas pockets and damage to the lining due to negative pressure, the following instructions must be observed:

Vibration

To prevent premature damage to the transmitter, excessive vibrations must be avoided by using appropriate supports.

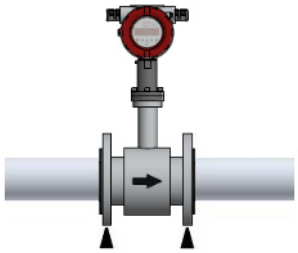

Horizontal pipeline routing

Installation preferable in slightly rising section of the pipeline.

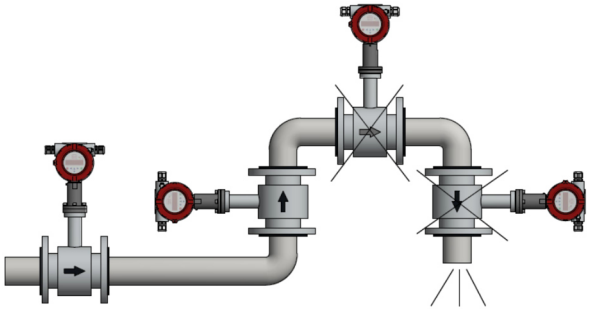

Open inlet and outlet

The device should preferably be installed in a siphon. The empty pipe detection function in the transmitter provides additional protection by detecting empty or partially filled pipelines.

Warning

Risk of solids accumulating in the siphon. It is recommended to provide clean access opening in the pipeline.

Downpipe

For downpipes, a siphon or a vent valve must be provided downstream of the sensor. This prevents the formation of negative pressure in the pipeline and thus avoids possible damage to the measuring tube lining. This measure also prevents the liquid flow from breaking away in the pipeline and thereby prevents air from entering the system.

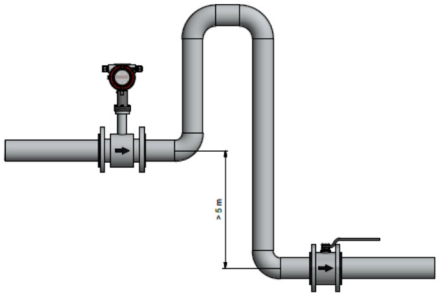

Long pipelines

As pressure surges may occur in long pipelines, control and shut-off devices must be installed downstream of the sensor. However, when installing the sensor in vertical pipelines, the control and shut-off devices must be installed upstream of the sensor, particularly for measuring tubes with a PTFE lining and at higher operating temperatures (risk of vacuum formation!).

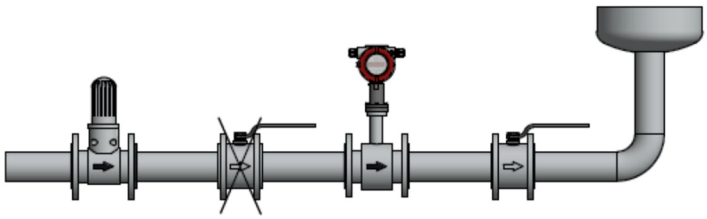

Installation of pumps

The sensor is not supposed to be installed on the suction side of the pump. This prevents the formation of negative pressure and thus avoids possible damage to the measuring tube lining.

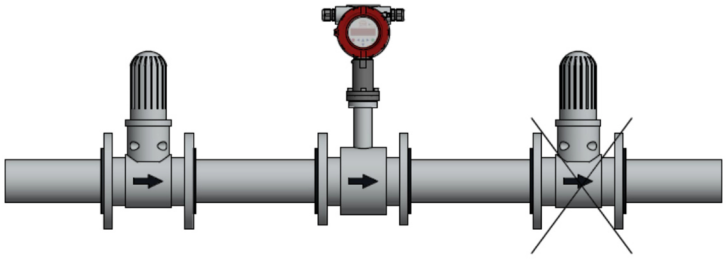

Warning

When using piston, diaphragm or peristaltic pumps, pulsation dampers may need to be installed.

Please also allow sufficient space for possible removal of the device.

4.4.4 Grounding – Potential equalization

Grounding the flow sensor is important both for safety reasons and for the proper operation of the electromagnetic flowmeter. The grounding connections must be connected to protective earth potential in accordance with VDE 0100 Part 410 and VDE 0100 Part 540. **For measurement-related reasons, this potential should be as close as possible to the potential of the process medium.** The grounding conductor must not carry interference voltages. Therefore, no other electrical devices should be grounded using the same conductor.

The measurement signal picked up by the electrodes is only a few millivolts. Proper grounding of the electromagnetic flowmeter is therefore an essential prerequisite for accurate measurement. The transmitter requires a reference potential to evaluate the measurement voltage present at the electrodes. In the simplest case, the metallic, non-insulating pipeline or its connecting flange can serve as reference potential.

For pipelines with an insulating lining or pipelines made of plastic, the reference potential is established via grounding rings or grounding electrodes. These provide the necessary conductive connection to the process medium and are made of a chemically resistant material. The material used should be identical to that of the measuring electrodes.

4.4.4.1 Grounding using grounding electrode

The device can optionally be equipped with grounding electrodes. For plastic pipelines, this version requires the least installation effort for grounding. Due to the relatively small surface area of the grounding electrodes, the use of grounding rings on both sides is preferable in systems where significant equalizing currents through the pipeline are expected.

4.4.4.2 Grounding using grounding rings

The outside diameter of the grounding ring should be at least equal to the diameter of the flange sealing lip, or the grounding ring must be dimensioned so that it is positioned inside the flange bolts and centered by them. The connection tabs extending outward must be connected to the functional earth terminal “FE” in the sensor terminal box. During installation, ensure that the seals do not extend inward beyond the grounding ring.

The grounding cables are not included in the scope of delivery and must be provided by the operator.

The grounding rings are available as accessories.

4.4.4.3 Example of grounding the EPM

Metal pipeline electrically conductive

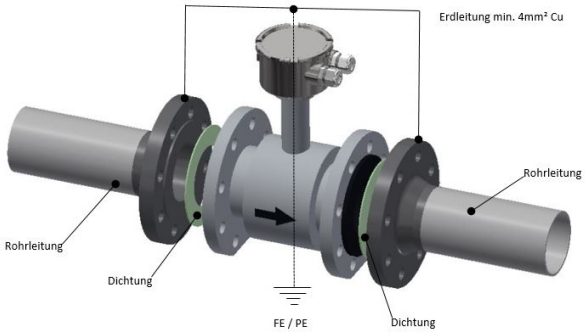

Plastic pipelines or internally coated metal pipelines – non-conductive

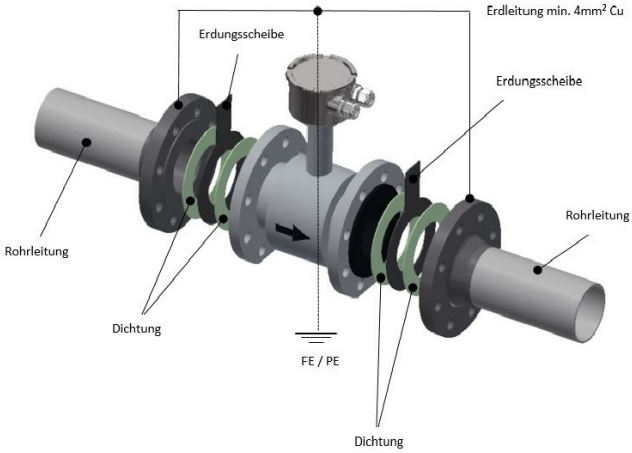

4.4.4.4 Cathodic protection of pipelines

Special care must be taken when installing the device in pipelines with cathodic protection.

For compact installation: The transmitter must be supplied via an isolation transformer. The “PE” connection must never be connected.

For remote installation: The shield must be connected to the sensor end via a 1.5 µF capacitor. The shield must never be connected at both ends.

For isolated installation: If the connections described above are not acceptable, the sensor must be electrically isolated from the pipeline.

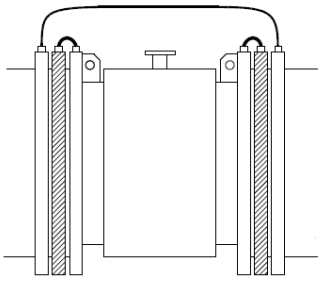

4.4.5 Bolt tightening torques

Electromagnetic flowmeters with measuring tube linings made of plastic or vulcanized materials, such as hard rubber, must be installed in the pipeline with particular care. PTFE, for example, is subject to cold flow under pressure. If the flange bolts are tightened too much during installation of the sensor, the sealing surface may become deformed. To ensure that the seals perform their intended function, it is essential to tighten the bolts to the correct torque.

The bolts should be tightened in a crisscross pattern. During the first tightening pass, approximately 50% of the specified torque should be reached, followed by 80% during the second pass. The full specified torque should only be applied during the third pass. If higher torques are required, flange protectors must be used.

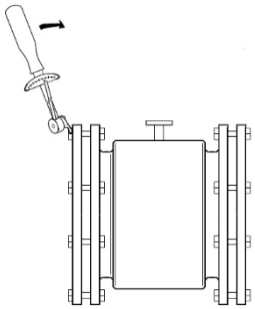

The maximum permissible torques are specified in the following tables.

DN	PN 25 (Nm)	PN 40 (Nm)
25	25	25
32	35	35
40	45	45
50	55	55
65	50	50
80	50	50
100	70	70
125	100	100
150	135	135
200	140	170
250	210	260
300	220	280
350	330	410
400	440	600
500	470	560
600	650	890
700	700	920
800	1 000	1 370

4.4.6 Remote mounting of the transmitter

A separate installation of the transmitter and the sensor is required in the following cases:

- Poor accessibility,
- Limited space,
- High process medium and ambient temperatures,
- Strong vibration

Warning

The sensor cable between the transmitter and the sensor must be shielded. The outer cable shield must be connected at both ends using special EMC cable glands (e.g. Hummel HSK-M-EMV).

Warning

For the remote version, the minimum permissible conductivity of the process medium is determined by the distance between the sensor and the transmitter. The maximum cable length to ensure measurement accuracy is 200 m (see diagram below).

Warning

The electrode cable must be installed in a fixed position. At low process medium conductivity, cable movement causes greater changes in capacitance and consequently interferes with the measurement signals.

Do not route the cable near electrical machines or switching devices.

Warning

The field coil cable must only be connected or disconnected after the power supply to the measuring device has been switched off.

4.5 Wiring

Please note the following wiring instructions. (The manufacturer's warranty is void in the event of improper wiring.)

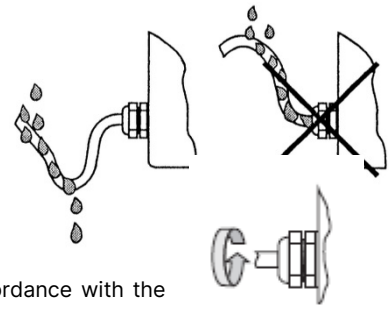

- Cable glands are not included in the scope of delivery
- Cable glands provided by the customer must comply with the applicable regulations and be suitable for the specified threaded connection.
- The cable glands must be suitable for the diameter of the cable used.
- Before entering the cable gland, the cable must be routed in a loop ("drip loop") – see figure on the right.
- The cable gland must not point upwards.
- The blind plug must not be removed from devices without electrical signal outputs.
- The sealing and tightening of the cable gland must be carried out in accordance with the manufacturer's specifications. Incorrectly tightened cable glands, whether overtightened or insufficiently tightened, may allow liquid to penetrate the interior of the housing.

Warning

Installation, maintenance and repair work on the sensor, transmitter or terminal box may only be carried out in a non-hazardous area! Before dismantling the device, always verify and ensure that the device is de-energized.

When using versions of remote mounted transmitter:

Warning

Only sensors and transmitters with the same serial number may be connected to each other. Connecting units with different serial numbers may result in measurement errors.

Warning

Ensure that the stripped and twisted inner cable shield ends inside the terminal housing are kept as short as possible up to the terminal. If necessary, cover them with insulating tubing to prevent short circuits.

The outer cable shield must be connected at both ends using EMC cable gland.

Tightening torques for cable entries

Cable entries on the housing:	12 Nm
Cable entry cap:	8 Nm

4.5.1 Integrally mounted transmitter

For the integrally mounted transmitter, the connections to the sensor are wired internally. The terminal assignment of the transmitter is specified in the operating instructions for the UMF2 transmitter.

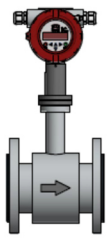

4.5.2 Remote mounted transmitter

4.5.2.1 Cable specifications

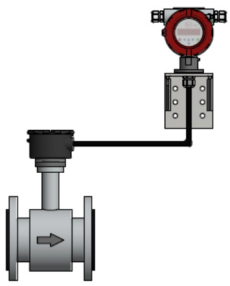

If the transmitter is installed separately from the sensor, the following cable must be used:

Cable length	Wire cross-section	Example
≤ 10 m	≥ 0,25 mm²	LIYCY-CY TP 2 x 2 x 0,25 mm²
> 10 m	≥ 0,75 mm²	LIY-TPC-Y 2 x 2 x 0,75 mm²

The electrode cables and field coil cables must each consist of twisted and shielded pairs. To protect against external interference, the conductor pairs are enclosed by an overall shield.

The outer shield must be grounded at both ends using special EMC-compliant cable glands.

4.5.2.2 Terminal box wiring diagram (transmitter)

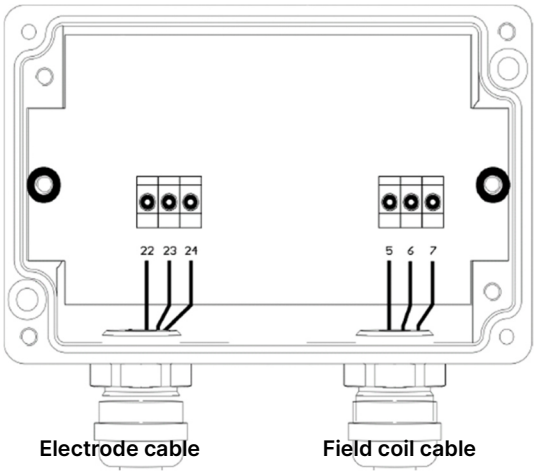

Field coil cable

Terminal	Function
5	Field coil
6	Field coil
7	Shield cable field coil

Electrode cable

Terminal	Function
22	Shield cable electrode
23	Electrode 1
24	Electrode 2
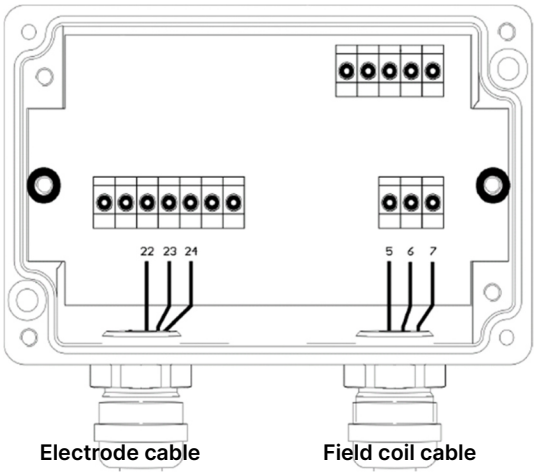
4.5.2.3 Terminal box wiring diagram (sensor)