Coriolis Mass Flow Meter

For high pressure and hydrogen dispenser applications, up to 1000 Bar

TMU-W

Technical information

- Outstanding accuracy
- Robustness against vibrations
- Working pressure up to 1000 Bar
- Measuring ranges up to 960 kg/h
- OIML R139:2018 Approval
- For hydrogen refuelling stations acc. to SAE J2601

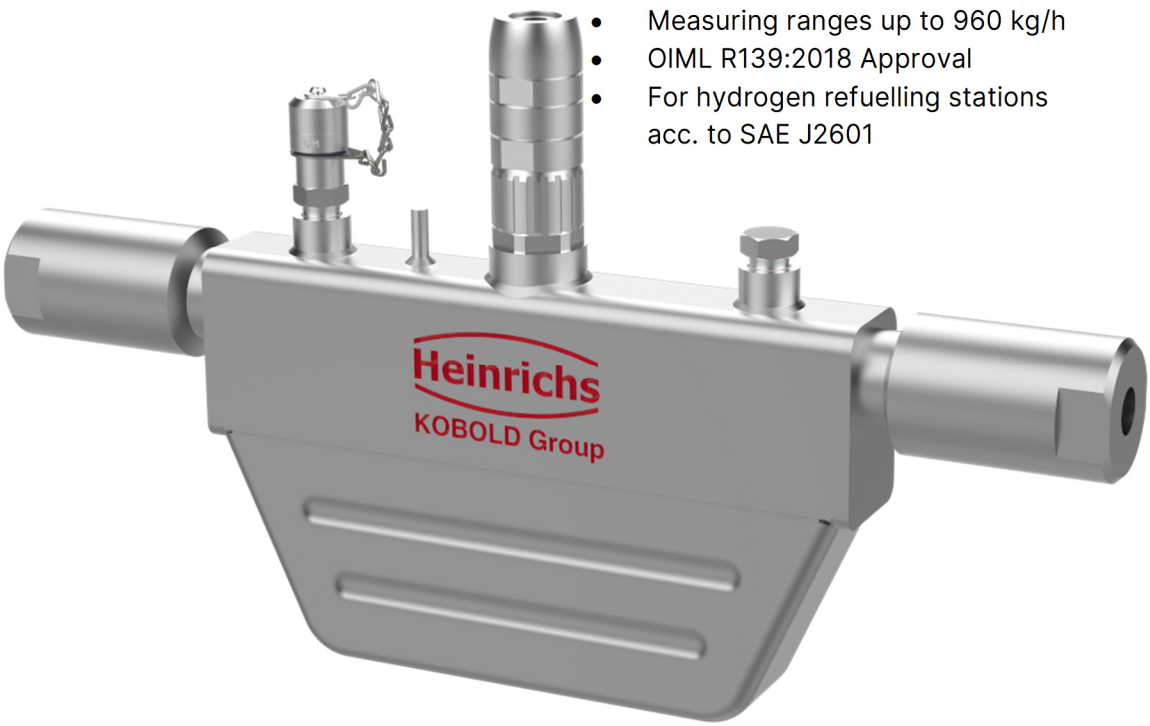

Function

The TMU-W product line was specially developed for hydrogen filling applications for dispensing stations.

During fuelling process, extremely high zero point and long term stability are required.

Its special design provides the highest possible stability and unrivalled measuring accuracy to the user.

Special materials and sophisticated engineering design methods such as FEM, CFD, FSI etc. were used to fulfil this task.

Optimized for use in slim hydrogen dispensers of the latest state-of-the-art generation.

Technical Details

Sensor system: TMU-W

Coriolis dual-pipe design.
TMU-W004, TMU-W006

Accuracy

Liquid:	0.1 % of actual flowrate ± ZP stability
Gas:	0.5 % of actual flowrate ± ZP stability
OIML R139:2018:	Class 2 (only TMU-W004)

Wetted parts:

- 316TI/1.4571

Process connection:

- 6MF 9/16-18 UNF
- Optional: ½“ NPT (f), Hofer ⅞"

Sensor containment:	1.4301 Stainless steel
Ambient temperature:	-40 °C...+80 °C -40 °F...+176 °F (acc. to OIML R139: -40°C...+55°C)
Process temperature:	-50 °C ...+100 °C -58 °F...+212 °F (acc. to OIML R139: -40°C...+55°C)
Process pressure:	TMU-W004: max. 1000 Bar TMU-W006: max. 500 Bar

Ingress protection: IP67 (EN 60529) / NEMA 6

Certificates and Approvals

ATEX / IECEx:	II 1/2G Ex ia IIC T2...T6 Ga/Gb
NEPSI:	Ex ia IIC T2...T6 Ga/Gb
OIML:	R139:2018

Available Transmitters UMC4 / UMC4-RM

Transmitter mounting:

- Field housing
  Remote mounted via junction box (½“NPT(f), M20x1,5) or connector (Harting Han® R23).
  IP67 (EN60529) / NEMA6
- Rack mount design (RM)
  remote via screw terminals.
  IP20 (to be mounted in min. IP54 ATEX certified protective cabinet)

Ambient temperature:

- -20 °C ... +60 °C
  (acc. to OIML R139: -40 °C ... +55 °C)

Power supply:

- 90...265 V_{AC}, 50/60 Hz (not for OIML R139)
- 19...36 V_{DC}

Outputs:

Each output circuit is galvanically isolated from each other as well as to ground.

Analogue:	1x 4...20 mA, passive, with HART® 1x 4...20 mA, passive Mass flow, volume flow, temperature.
Binary:	passive via optocoupler Pulse duration: 50 ms adjustable range 0,1...2000 ms
Status:	passive via optocoupler Forward-/Reverse, MIN/MAX flow rate, MIN/MAX temperature, alarm, second pulse output (phase shifted to pulse 1 by 90°).

Certificate and Approvals for UMC4 / UMC4-RM

Field housing:

ATEX / IECEx: II (1)2G Ex d [ia Ga] IIC T4-T3 Gb
NEPSI: Ex db [ia Ga] IIC T4/T3 Gb

Terminal compartment: Ex d

Type of protection signal output:
- Ex [ia Ga] intrinsically safe
- Non-intrinsically safe

Rack mount design:

ATEX / IECEx: II (1)3G Ex ec [ia Ga] IIC T6..T3 Gc

(to be mounted in min. IP54 ATEX certified protective cabinet)

Type of protection signal output:
- Ex [ia Ga] intrinsically safe
- Non-intrinsically safe

Measuring ranges

TMU-W004: max. 4kg/min H_2 (P_{nom} 1000 Bar), with OIML R139:2018 approval

TMU-W006: max. 16kg/min H_2 (P_{nom} 500 Bar)

Dimensions

TMU-W004

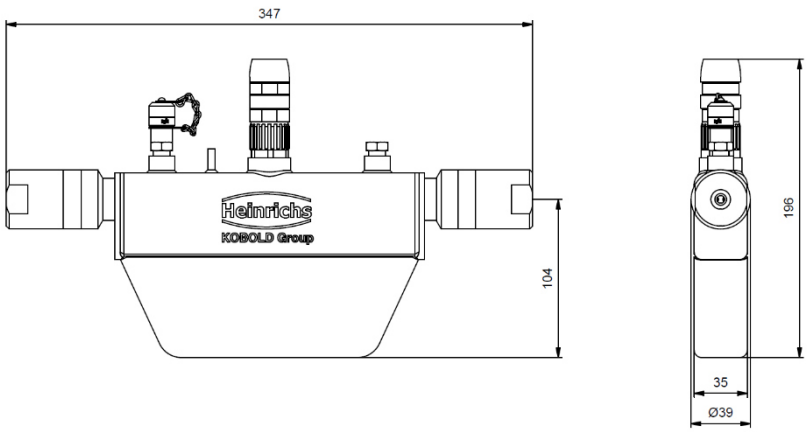

TMU-W006

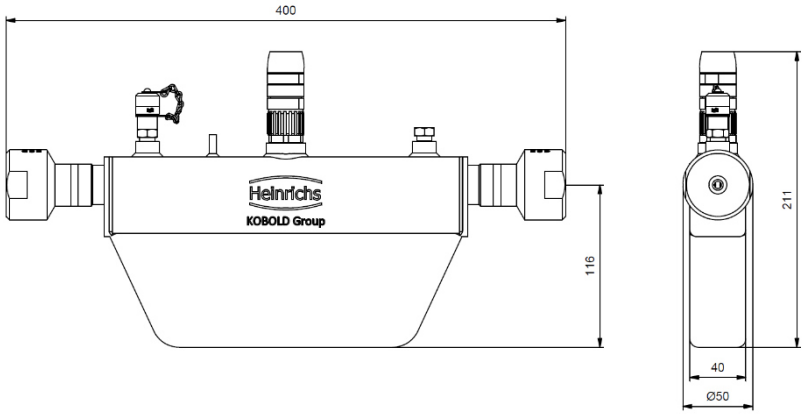

UMC4 (Field housing)

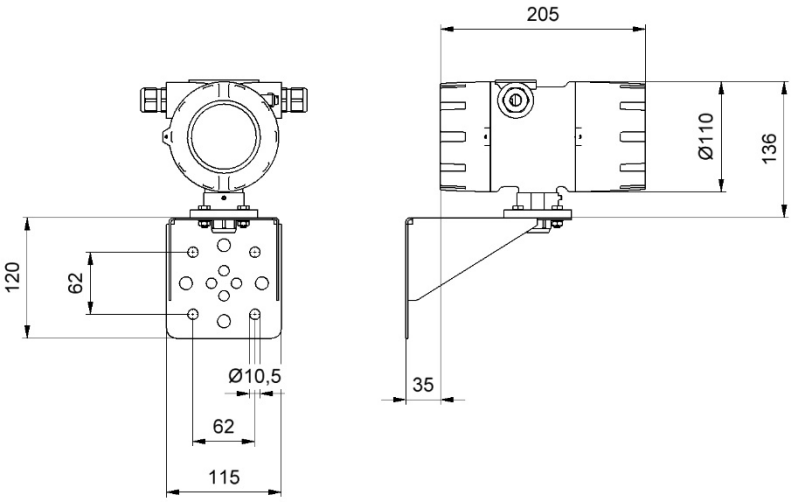

UMC4-RM (Rack mount design)

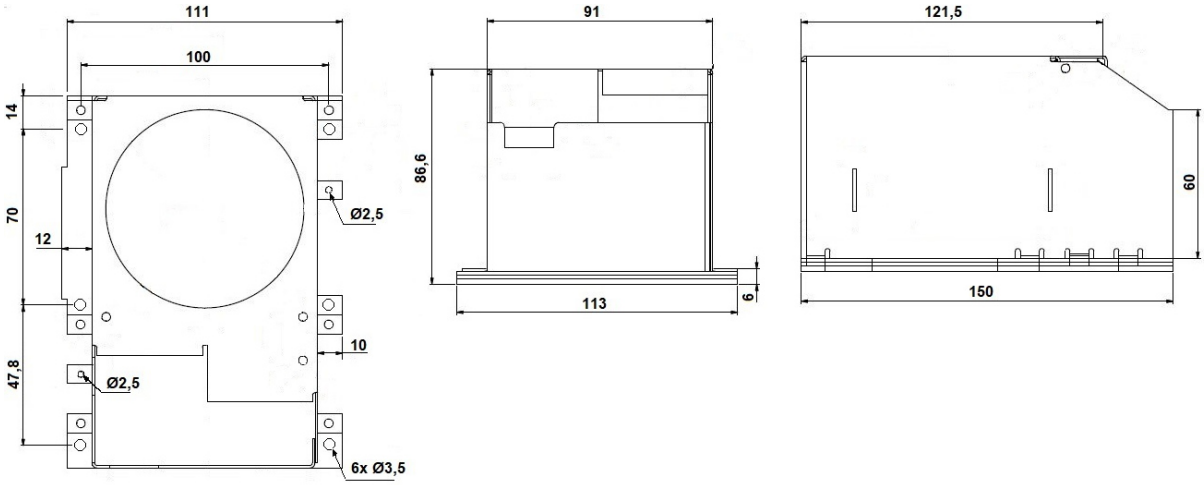

Necessary data for the sizing of the meter

Medium: _____

	Nominal	Minimum	Maximum	Unit
Flow rate:				
Process pressure: ☐abs. / ☐gauge.				
Process temperature:				
Density: (at process condition)				
Viscosity: (at process condition)				

Order details sensor

Example: TMU-W004-4500-A00-K0-70-0-H

Model code	Description			Notes
TMU				
-	**Wetted materials**	Measuring range	P_{Nom}	
W004	Stainless steel 316TI / 14571	4 kg/min H_2	1000 Bar	
W006	Stainless steel 316TI / 14571	16 kg/min H_2	500 Bar	2)
-	**Process connection**	Installation length / P_{Nom} W004	W006	
6010	¼" NPT(f)	347 mm / 500 Bar	400 mm / 500 Bar	
6030	½" NPT(f)	347 mm / 500 Bar	400 mm / 500 Bar	
4550	Hofer 7/8"	347 mm / 500 Bar	400 mm / 500 Bar	
4500	6MF 9/16-18 UNF	347 mm / 1000 Bar	400 mm / 500 Bar	
XXXX	Special, customer specified			
-	**Sensor containment**			
A	Stainless steel (1.4301)	Overpressure blow out, N_2 filling nozzle, N_2 filled		
	Heating / Cooling			
00	without			
-	**Transmitter mounting**	Process temperature	Electrical connection	
K	Remote mounted transmitter (IP67)	-50...100 °C (-58...212 °F)	Connector (Harting Han® R23)	
X	Special, customer specified			
	Approvals			
0	without			
L	ATEX / IECEx / UKEX II 1/2G Ex ia IIC T2...T6 Ga/Gb			
B	NEPSI Ex ia IIC T2...T6 Ga/Gb			
-	**Calibration flow**			
1	Standard, 3-point			
3	External lab			
7	OIML R139:2018. Hydrogen			1)
X	Special, customer specified			
	Calibration density			
0	without			
-	**Supplementary equipment**			
0	without			
1	Certificate of compliance with the order 2.1			
2	Test report 2.2			
B	Inspection certificate 3.1 with material certificate (DIN EN 10204:2004)			
X	Special, customer specified			
-	**Design**			
H	Heinrichs			

Notes:
1) Must be used with approved UMC4 transmitter for system approval.
2) Not for OIML R139:2018. Hydrogen.

Order details transmitter

Example: UMC4-E11A21H

Model code					Hinweise
UMC4					
-	**Mounting**			Conduit port opening	
E	remote mount	without junction box	Transmitter with 5 m cable	M20 x 1,5	1)
D	remote mount	with junction box		M20 x 1,5	1)
F	remote mount	via screw terminals	Rack mount version	without	
	Display / interface board				
1	Integral within transmitter housing, for ambient temperature up to 60°C				
	Power supply				
1	90...265 V_{AC}, 50/60 Hz				3), 4)
2	19...36 V_{DC}, 24 V_{AC} (+5%...-20%), 50/60 Hz				
	Outputs				
A	Analogue output 1: 4 ... 20 mA with HART® Analogue output 2: 4 ... 20 mA Pulse output: passive Status output: passive				
	Approvals			Ambient temperature	
0	without				
2	ATEX, IECEx II (1)2G Ex d [ia Ga] IIC T4-T3 Gb NEPSI Ex db [ia Ga] IIC T4/T3 Gb		terminal compartment Ex d	-20...60 °C	3)
3	ATEX, IECEx II (1)3G Ex ec [ia Ga] IIC T6..T3 Gc		Rack mount design	-20...55 °C	2)
	Type of protection (signal output)				
0	Without Approval				5)
1	Intrinsically safe Ex [ia Ga]				
2	Not intrinsically safe				
	Design				
H	Heinrichs				

In the table are only options listed, which are relevant for the use of the UMC4 transmitter with a TMU-W sensor.

Notes:

1) Includes mounting bracket for wall and 2" pipe.
2) Only for option F
3) Not for option F
4) Not for OIML R139:2018 (TMU-W)
5) Only for approval "0"